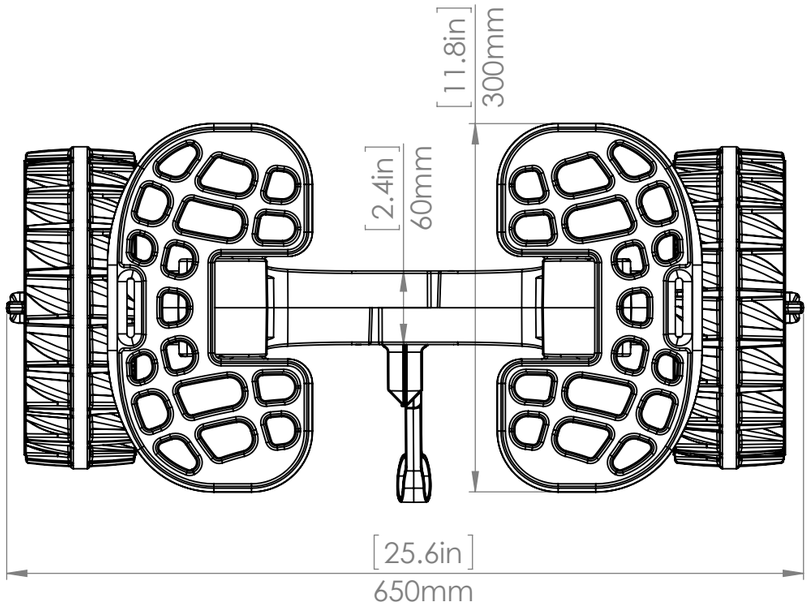

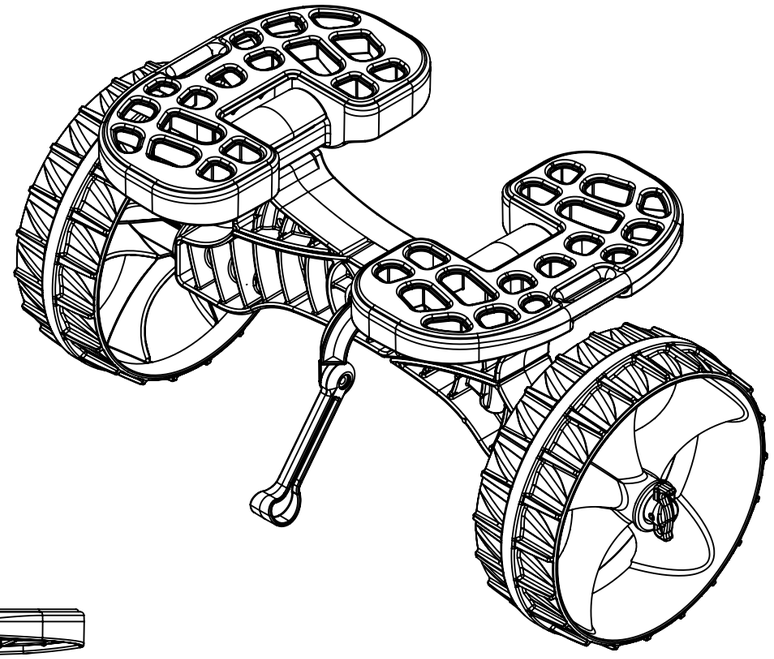

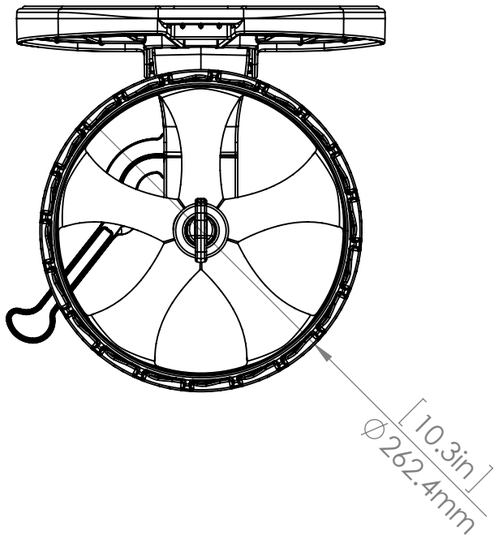

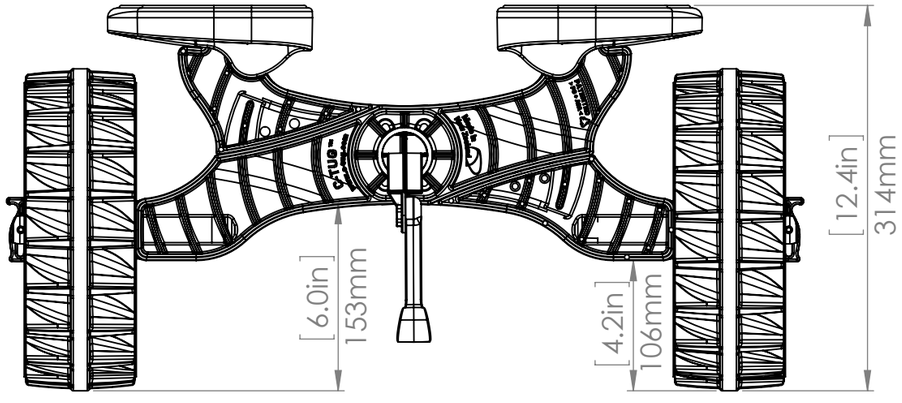

RAILBLAZA
HOLD EVERYTHING...

Date:	13/01/2016
DRAWN BY:	Chris Pratt

TITLE:

C-Tug

DWG NO. A3

SCALE:1:5

SHEET 1 OF 1